EPSON®
EXCEED YOUR VISION

THE INTELLIFLEX™ FEEDING SYSTEM

Introducing the smart parts singulation solution.

Powered by Epson® robots, IntelliFlex software and Vision Guide, the IntelliFlex Feeding System offers a smart alternative to part feeders available in the market today. This revolutionary system helps eliminate costly, time-consuming retooling and allows manufacturers to work with a wide variety of parts without purchasing new equipment. Integrated with Epson RC+® Development Software, the IntelliFlex Feeding System offers easy setup and configuration from one environment. Its point-and-click interface helps reduce the typical development time required for advanced applications. Smart auto-tuning automatically adjusts the IntelliFlex Feeding System for new parts, giving you a flexible, cost-efficient, future-proof parts singulation solution.

Integrated Flexible Feeding Solution

Parts feeding made simple.

High-performance parts-feeding solution — powered by Epson robots, IntelliFlex software, and Vision Guide

Simple setup and configuration — fully integrated with Epson RC+ Development Software

Point-and-click interface — helps reduce the typical development time required for advanced applications

Flexible parts handling — four feeder sizes; supports parts from 3 to 15 mm, 5 to 40 mm, 15 to 60 mm and 30 to 150 mm

Quick parts changeover — feeder offers easy setup to accommodate parts that help reduce the total cost of ownership

Compatible with a wide range of parts — supports simple to complex parts, as well as delicate materials

Smart auto-tuning — automatically adjusts the feeder parameters for new parts setup

Unique directional vibration capabilities — multi-axis vibration technology for optimized parts control and singulation

Backlight options — red, white, blue, green and infrared available

Tray configuration options — ESD/anti-static, anti-stick and anti-rolling available

Engineered to reduce development time vs. typical flexible feeders

Fully integrated with the Epson RC+ Development Software, the IntelliFlex Feeding System makes setup and configuration easier than ever. Its point-and-click interface helps reduce the typical development time required for advanced applications, often taking it from weeks down to days.

EPSON SYSTEM SETUP

1. **Vision Programming**
   - Built-in robot-to-vision calibration and point & click programming
2. **Parts Tuning**
   - Automatic parts tuning with vision feeder integration
3. **Parts Control Adjustment**
   - Configuration wizard for defining part separation pickup area and more

TYPICAL SYSTEM SETUP

1. **Feeder Communications**
   - Low-level protocol using feeder command set
2. **Feeder Tuning**
   - Getting parts to move properly
3. **Vision Setup and Calibration**
   - Calibrating vision system to robot
4. **Vision Programming**
   - Finding parts reliably
5. **System Programming**
   - Robot + Feeder + Vision coordination
6. **Optimization**
   - Fine-tuning and performance optimization

EPSON
WARNING

Easy customization to support a wide variety of parts

The IntelliFlex Feeding System works in conjunction with Epson RC+ Development Software to provide a step-by-step approach to system configuration. An easy-to-use wizard makes it simple to set up the feeder to the exact parameters needed for many different part types.

Multi-axis vibration technology for optimized parts control

1

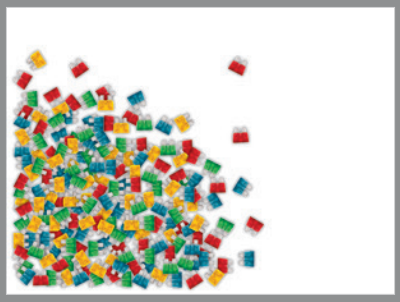

Parts cannot be picked when they are bunched together

2

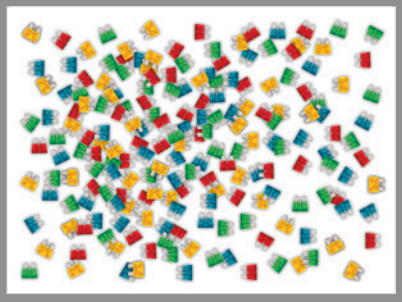

Vibration technology is used to separate parts so they can be found and picked by the robot

3

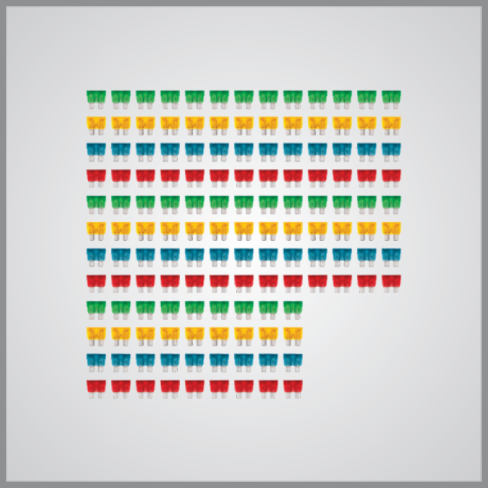

Parts are then separated and precisely placed across the full scope of the pallet

Vision Guide is used with IntelliFlex software to drive feeder motions and optimize parts singulation.

Precision parts calibration with smart auto-tuning

Epson RC+ Development Software also features an intuitive wizard to guide users through customized calibration. Step-by-step, this wizard automatically determines the exact values needed for optimum tuning and calibration.

Part pickup regions maximize parts throughput

Easily set parameters specific to each part, no coding required

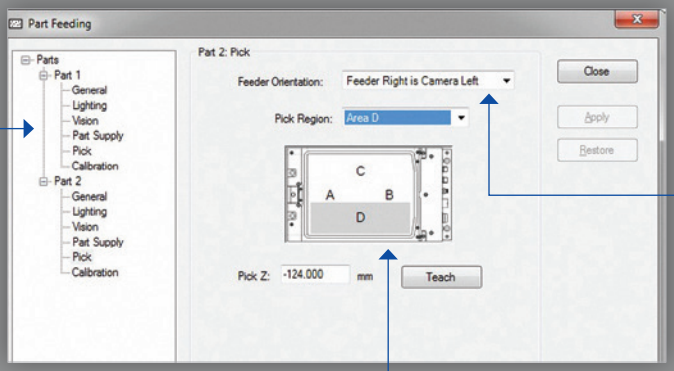

Configures feeder orientation to properly select pickup area without the need to modify physical application layout

Define part pickup area to optimize cycle time

Part calibration (tuning) wizard reduces tuning time

3 simple steps to set up flip and separate calibration parameters

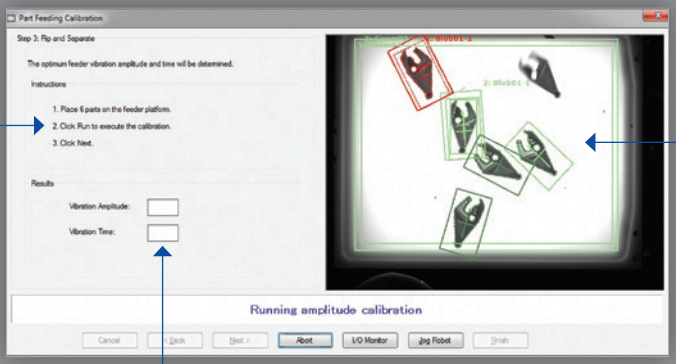

Integrated image display window to show part separation results

Automatically computes and displays vibration amplitude and vibration time tuning parameters

Powerful software made to meet your needs.

Offering multiple options designed to meet the needs of most any automation solution, IntelliFlex can support up to 16 different parts per project. Comprehensive software enables the robot to pick up to 4 active parts per feeder, at any given time. There is even an option, on select models, to pick parts from one feeder using two different robots.

Epson RC+ updates offer even greater flexibility

The latest version of our software, features many new tools and enhancements to make implementing automation solutions easier than ever.

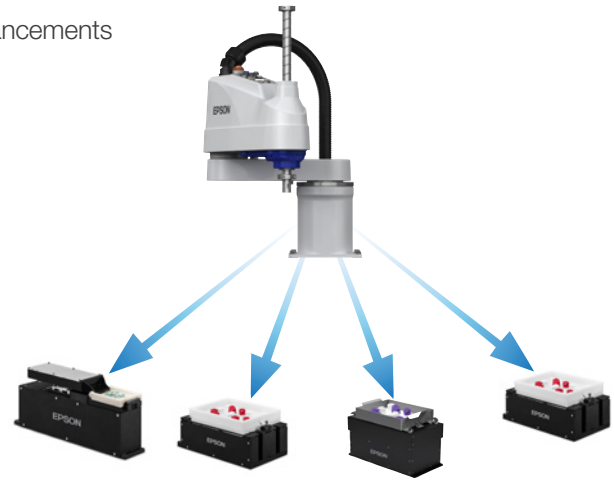

1 Robot/Controller, up to 4 Feeders

- Supported by select robots
- Feeders can be the same size or different sizes to accommodate a range of part sizes

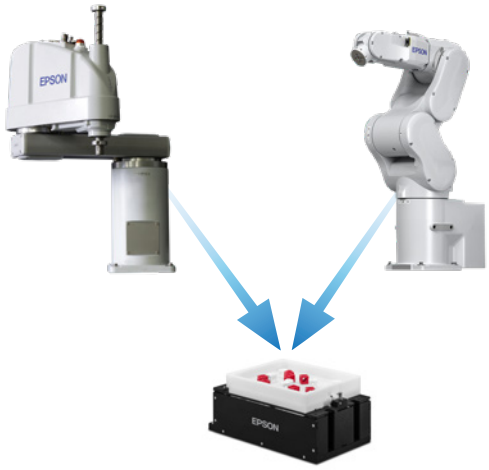

2 Robots, 1 Feeder

- Supported by select robots

Versatile parts compatibility

The IntelliFlex Flexible Feeding System supports a wide array of parts and materials, making it ideal for many different part types. Plus, it offers easy setup, allowing for quick parts changeover and reduced cost of ownership.

Unlike bowl feeders, the IntelliFlex Feeding System can be used for the parts you need today, as well as those you may use in the future. Supporting simple to complex parts, the IntelliFlex Feeding System can handle parts ranging from 3 to 150 mm in size.

Applications:

- Mechanical and Electronic Assembly
- Kitting/Palletizing/Tray Loading
- Material Handling

Parts Materials:

- Plastic
- Rubber
- Metal

Options to meet your needs today and in the future

Choose from a variety of options, designed to meet your needs, based on the parts and materials being handled. Multiple backlight options are available to meet the vision lighting requirements for your specific parts. Tray configuration options are also available to accommodate varying part types.

- **Backlight options** — red, white, green, blue and infrared available
- **Tray configuration options** — ESD/anti-static, anti-stick, anti-rolling, medical and black available
- **Hopper** — for easy loading of additional parts
- **Purge** — automatically remove parts for seamless changeovers

IntelliFlex Feeding System Specifications

Flexible Feeder Specifications				
Model Name	**IntelliFlex 80**	**IntelliFlex 240**	**IntelliFlex 380**	**IntelliFlex 530**
Model Number	**RIF80**	**RIF240**	**RIF380**	**RIF530**
Part Size Dimensions	3 - 15 mm	5 - 40 mm	15 - 60 mm	30 - 150 mm
Max Surface Load Per Feeder	0.05 kg	0.40 kg	1.5 kg	2.0 kg
Communication	Ethernet (TCP/IP)			
Power Supply	24 V / 6 A	24 V / 8 A	24 V / 20 A	24 V / 20 A
Vibration Platform (Length x Width)	65 x 52 mm	195 x 150 mm	254 x 325 mm	427 x 371 mm
Footprint (Length x Width x Height)	320 x 65 x 140 mm	300 x 171 x 132 mm	499 x 257 x 307 mm	600 x 372 x 320 mm
Compatible Robot Series	SCARA: G/LS-B/RS/T 6-Axis: C/N/VT			
Vision Integration	Vision Guide PV1 and CV2			
Software Features				
Max # Of Feeders Supported Per Robot Controller (All-in-Ones)	2			
Max # Of Feeders Supported Per Robot Controller (RC700A & RC90B)	4			
Max # Of Robots Sharing The Same Feeder At The Same Time (RC700A With Drive Units Only)	2			
Max # Of Robots Sharing The Same Feeder At The Same Time (RC90B & All-in-Ones)	1			
Max # Of Unique Parts Per Feeder Running At The Same Time	4			
Max # Of Parts Per Development Environment Project (Epson RC+)	16			
Purge Software Function (IntelliFlex 80 Requires Purge Calibration)	Supported			
Options				
Purge Hardware	Optional hardware required	Feeder customization required	Optional hardware required	
Integrated Backlight Options	White / Red / Infrared / Green / Blue			
Tray Configuration Options	ESD (Anti-static) Anti-stick Anti-rolling Medical Black			
Hopper Sizes	0.16 L	2 L / 3 L	10 L	15 L
What's In The Box?	Flexible Feeder, IntelliFlex Software, Power and Communication Cables			
Support	Customer Service (562) 290-5920 service@robots.epson.com Applications Support (562) 290-5930 applications@robots.epson.com Sales Inquiries (562) 290-5997 info@robots.epson.com			

IntelliFlex 80

- Part sizes supported: 3 to 15 mm
- Vibration platform: 65 x 52 mm
- Hopper size: 0.16 L

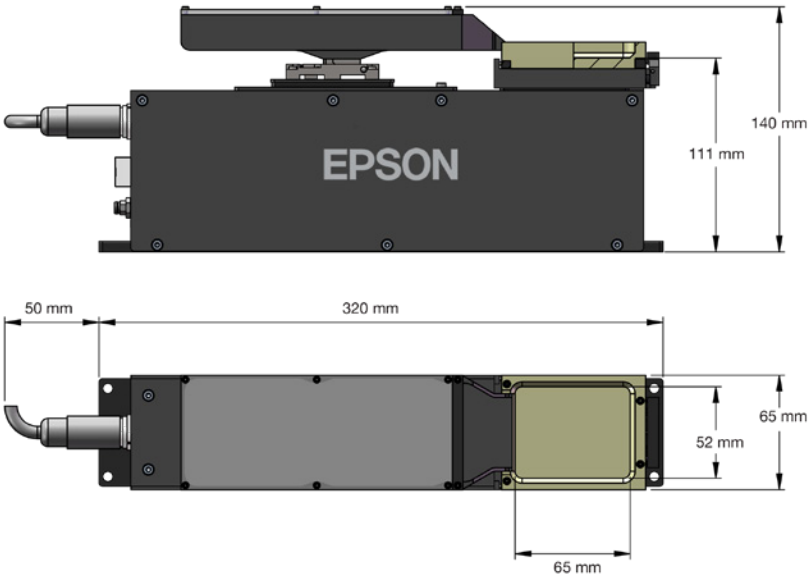

IntelliFlex 240

- Part sizes supported: 5 to 40 mm
- Vibration platform: 195 x 150 mm
- Hopper size: 2 L / 3 L

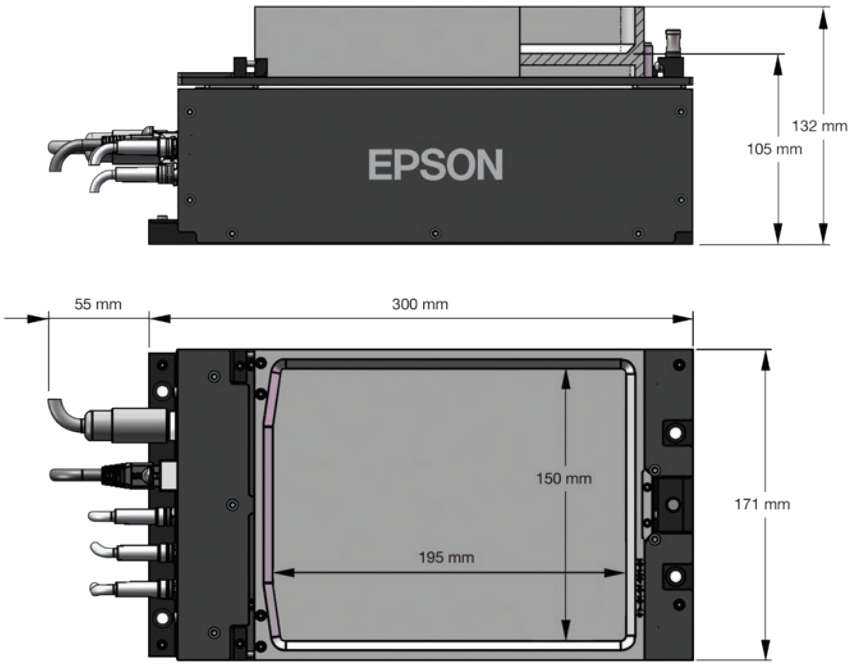

IntelliFlex 380

- Part sizes supported: 15 to 60 mm
- Vibration platform: 325 x 254 mm
- Hopper size: 10 L

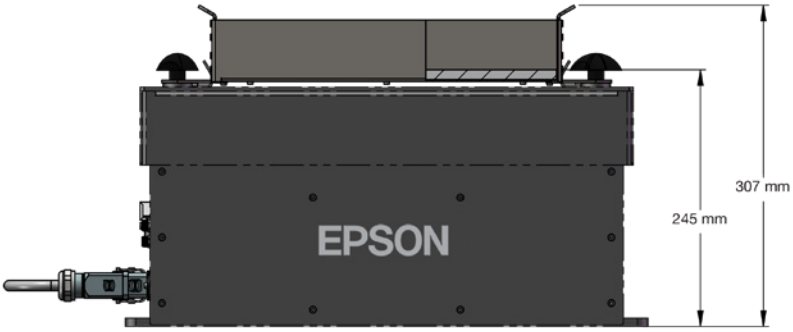

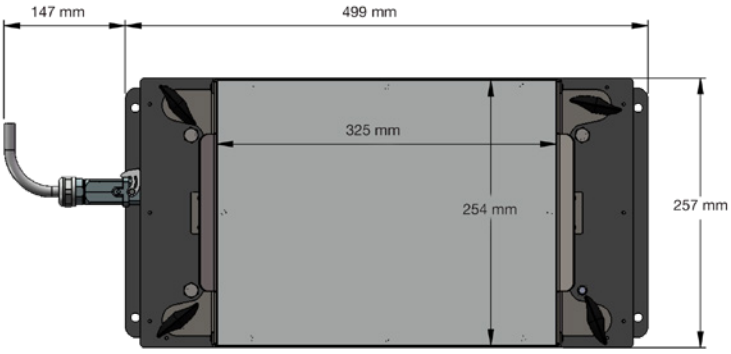

IntelliFlex 530

- Part sizes supported: 30 to 150 mm
- Vibration platform: 427 x 371 mm
- Hopper size: 15 L

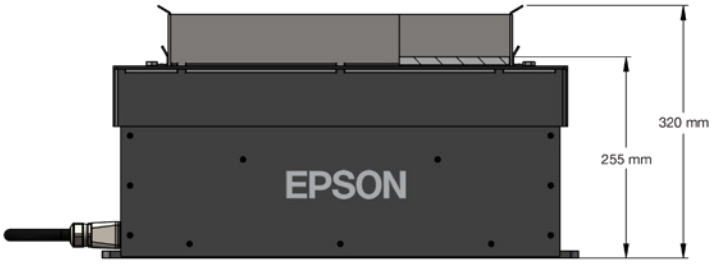

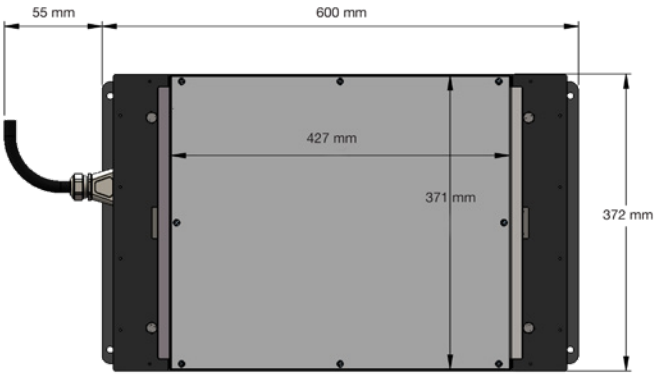

EPSON®
EXCEED YOUR VISION

Epson Business Solutions

Epson is a leading provider of innovative technology solutions that help businesses succeed. We partner with you to best meet your specific needs, focusing on:

- Improved productivity
- World-class customer service and support
- Cost-effective, high-quality solutions
- A commitment to the environment

Discover how Epson can help you work toward the future. **www.epson.com/forbusiness**

Epson America, Inc.
3131 Katella Ave., Los Alamitos, CA 90720

Epson Canada Limited
185 Renfrew Drive, Markham, Ontario L3R 6G3

www.epson.com
www.epson.ca
www.epsonrobots.com

Better Products for a Better Future™
eco.epson.com

Specifications and terms are subject to change without notice. EPSON and Epson RC+ are registered trademarks, EPSON Exceed Your Vision is a registered logomark and Better Products for a Better Future is a trademark of Seiko Epson Corporation. IntelliFlex is a trademark of Epson America, Inc. All other product and brand names are trademarks and/or registered trademarks of their respective companies. Epson disclaims any and all rights in these marks. Copyright 2020 Epson America, Inc. CPD-56136R1 10/20